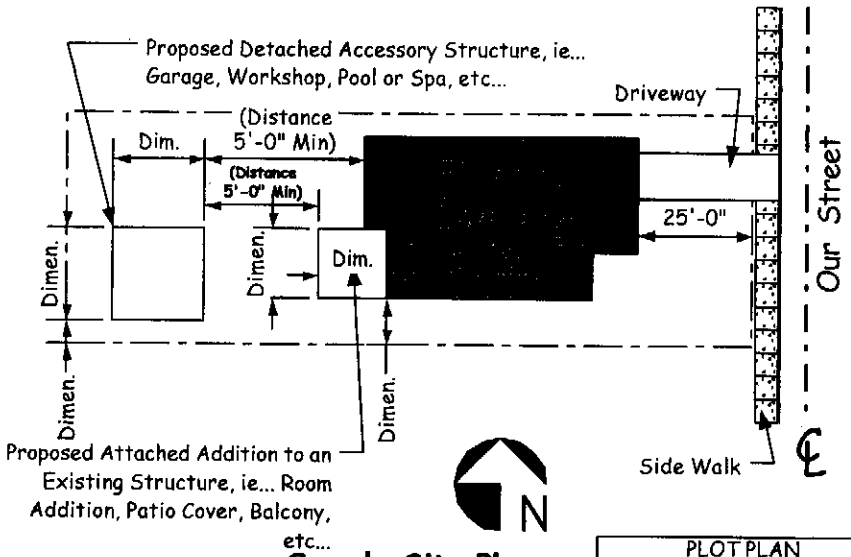

Sample Site Plan

Scale: 1" = 40'

PLOT PLAN
NAME: Jack & Jill Homeowner
ADDRESS: 1234 Our Street
PHONE: (909) 555-1234

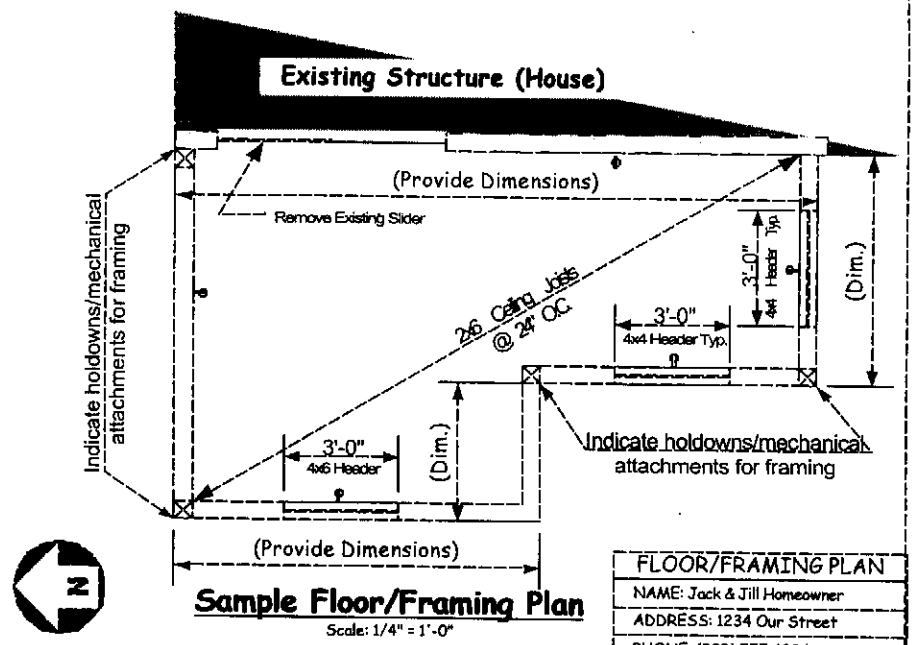

Sample Floor/Framing Plan

Scale: 1/4" = 1'-0"

FLOOR/FRAMING PLAN
NAME: Jack & Jill Homeowner
ADDRESS: 1234 Our Street
PHONE: (909) 555-1234

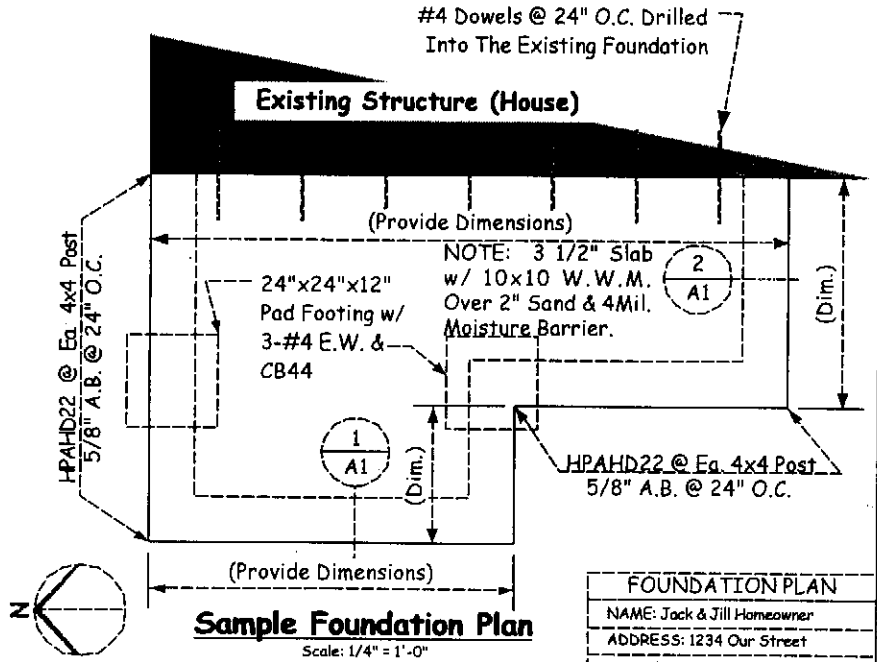

Sample Foundation Plan

Scale: 1/4" = 1'-0"

FOUNDATION PLAN
NAME: Jack & Jill Homeowner
ADDRESS: 1234 Our Street
PHONE: (909) 555-1234

Requirements:

1. Each different plan shall fill a minimum 8 1/2" x 11" sheet of paper (No graph paper please).
2. Plans and notes shall be legible.
3. Did you remember to:

- Show all property lines and the distances of all structures to those property lines.
- Show all streets and alleys.
- Show all buildings and/or structures on the property, existing and proposed and the distances between those buildings and/or structures..
- Provide all of the information requested in the sample title block on each page.

CITY OF MARYSVILLE — GATEWAY to the GOLD FIELDS

Building Department

Examples of Plan Views Required For Accessory Structures And Minor Additions

SIZE	FSCM NO	DWG NO	REV
SCALE As Shown		SHEET 1 OF 4	

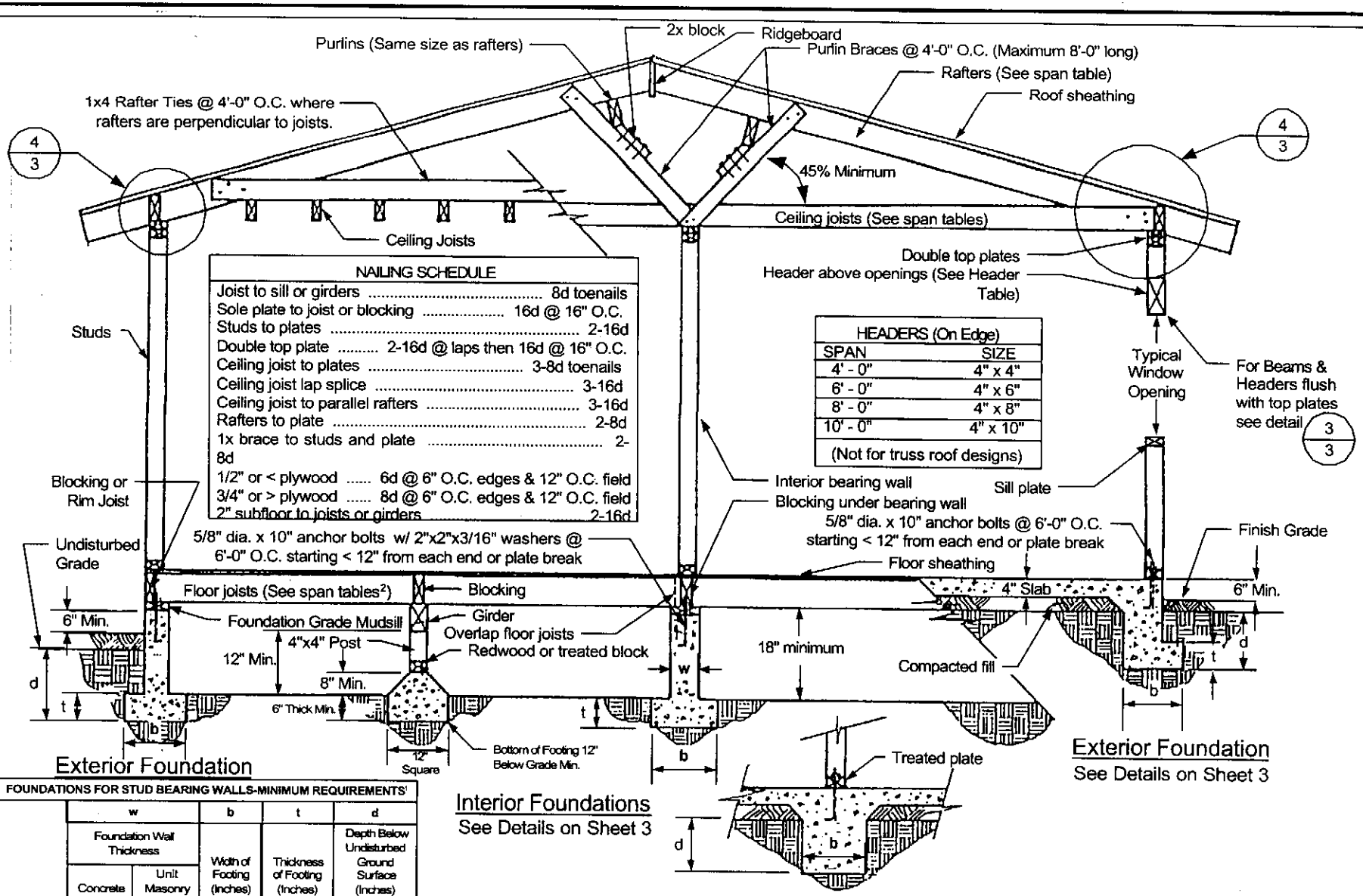

NAILING SCHEDULE	
Joist to sill or girders	8d toenails
Sole plate to joist or blocking	16d @ 16" O.C.
Studs to plates	2-16d
Double top plate	2-16d @ laps then 16d @ 16" O.C.
Ceiling joist to plates	3-8d toenails
Ceiling joist lap splice	3-16d
Ceiling joist to parallel rafters	3-16d
Rafters to plate	2-8d
1x brace to studs and plate	2-8d
1/2" or < plywood	6d @ 6" O.C. edges & 12" O.C. field
3/4" or > plywood	8d @ 6" O.C. edges & 12" O.C. field
2" subfloor to joists or girders	2-16d

HEADERS (On Edge)	
SPAN	SIZE
4' - 0"	4" x 4"
6' - 0"	4" x 6"
8' - 0"	4" x 8"
10' - 0"	4" x 10"
(Not for truss roof designs)	

FOUNDATIONS FOR STUD BEARING WALLS-MINIMUM REQUIREMENTS[1]	w		b	t	d
	Foundation Wall Thickness		Width of Footing (Inches)	Thickness of Footing (Inches)	Depth Below Undisturbed Ground Surface (Inches)
	Concrete	Unit Masonry			
Standard Anchor Bolts Only	6	6	12	6	12
w/ HPA or Holdown Bolt	8	8	12	6	12

Special foundation reinforcement may be required for use in expansive soils.

NOTES: 1. All footings shall have 1-#5 reinforcing bar (rebar), top and bottom, continuous. Splices shall overlap a minimum of 15".
2. Simple floor joist designs may be taken from the California Building Code span tables or the Corona Deck Standard span tables.

CITY OF MARYSVILLE GATEWAY TO THE GOLD FIELDS

Building Department

Conventional Light Frame Details for Single Story Residential Construction

03/01/2002	\FrameDtl.vsd	2 OF 4

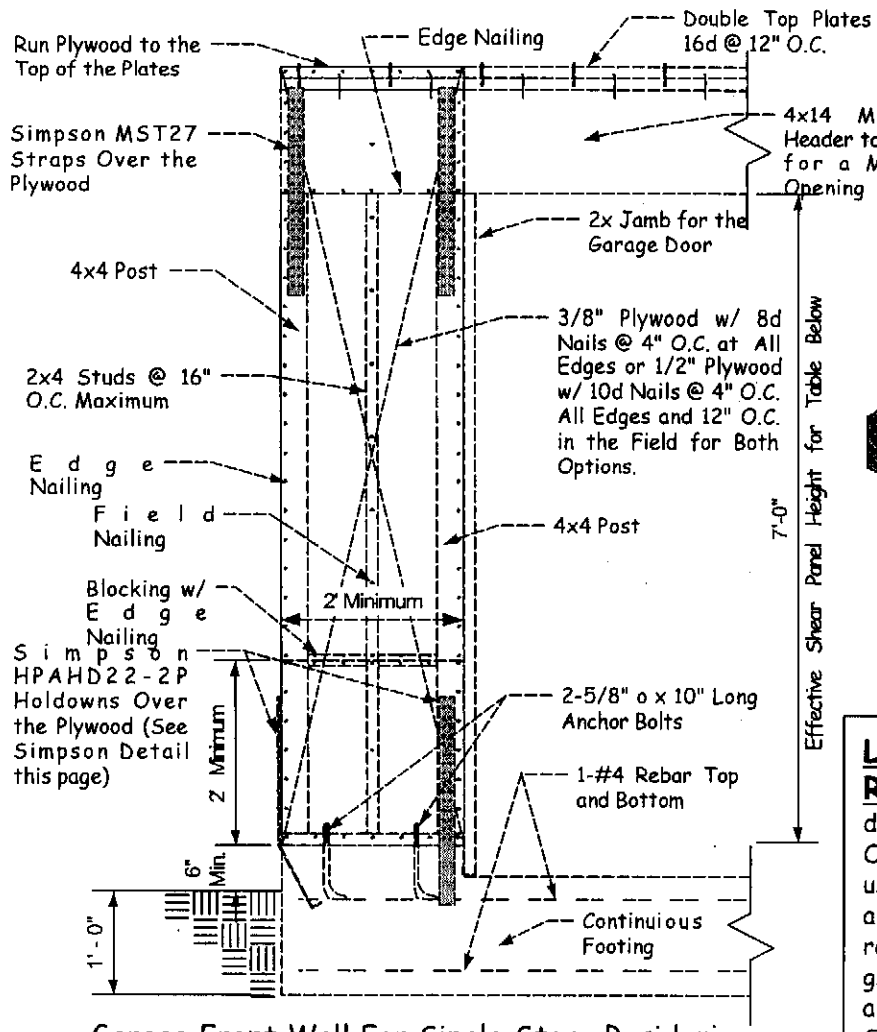

Garage Front Wall For Single Story Residence

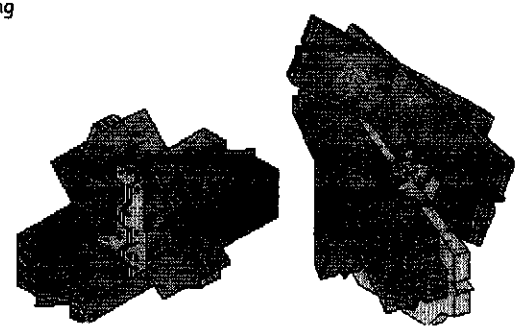

Typical A35 Connection from the Double Top Plates to the Rafter or Blocking

Refer to Legend Item #7 on Sheet 3 of 3

(Taken From the Simpson Catalog)

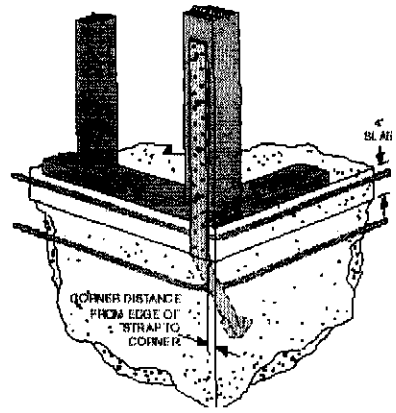

Typical HPAHD Double Pour Corner Installation

(Taken From the Simpson Catalog)

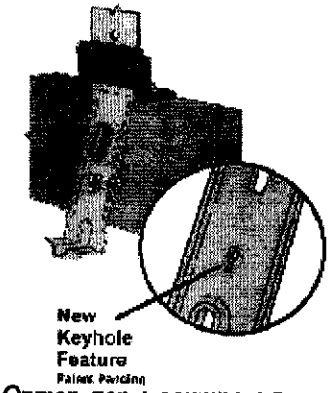

Option for Securing Strap

Note: Holdowns must be secured in place prior to the foundation inspection (See Example above.)(Taken From the Simpson Catalog)

Listed Structural Hardware Required: The structural hardware dipicted is the Simpson Strongtie brand. Other manufacturer's hardware may be used provided they are listed products and the stuctural values shown in their research reports are at least equal to or greater than the values published in the applicable research reports for the Simpson hardware.

NOTE: The California Building Code specifies that Shear Panels on the sides of a maximum 10' high opening for a residential garage shall have a minimum of a 2:1 ratio on one side and 3 1/2:1 on the other. An example of the 3 1/2:1 is shown above.

SHEAR PANEL HEIGHT TO WIDTH RATIOS FOR VARIOUS SHEAR PANEL HEIGHTS

Panel Height	3.5:1 Ratio 1st Panel Width	2:1 Ratio 2nd Panel Width
7'	2'-0"	3'-6"
8'	2'-4"	4'-0"
9'	2'-8"	4'-6"
10'	2'-10"	5'-0"

CITY OF MARYSVILLE GATEWAY TO THE GOLD FIELDS

Building Department

Conventional Light Frame Details for Residential Construction

03/01/2002 | \FrameDtl.vsd | 3 OF 4

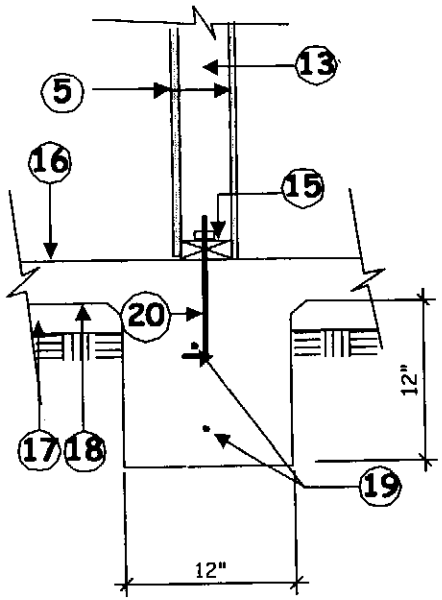

INTERIOR BEARING FTG.
Detail 1 NTS

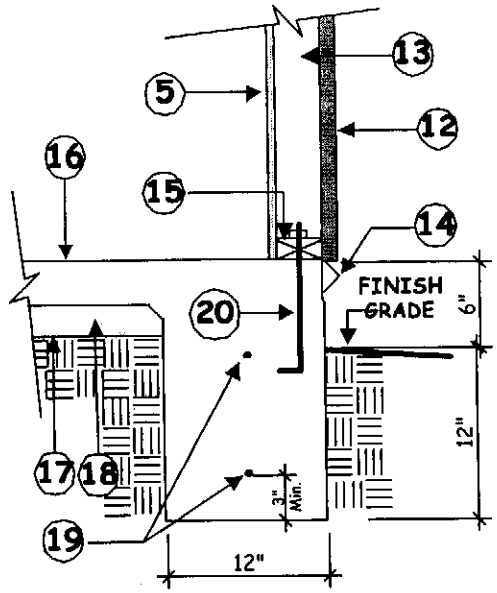

EXTERIOR BEARING FTG.
Detail 2 NTS

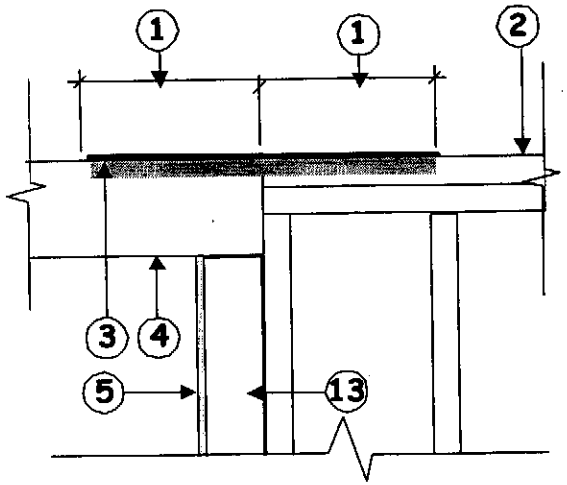

DRAG DETAIL
Detail 3 NTS

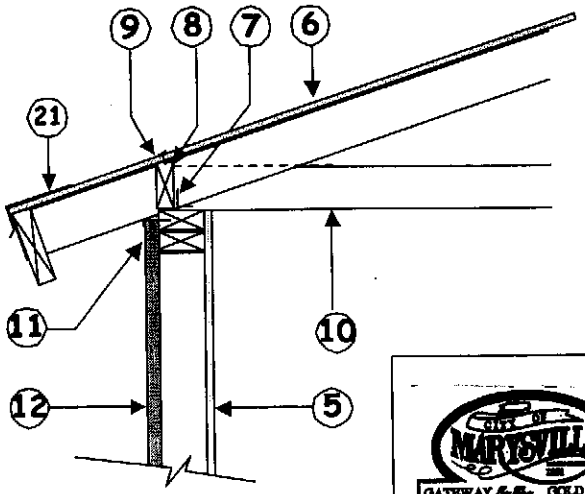

SHEAR TRANSFER
Detail 4 NTS

LEGEND

1- Equal distance on either side of the break.
2- Double Top Plate.
3- SIMPSON ST6236 Steel strap w/ 20-16d nails at each end or equal.
4- Header, size per plan (See sheet 1).
5- Interior wall finish.
6- Roof Sheathing.
7- SIMPSON A-35 @ 48"O.C.
8- 2X Block
9- 8d's @ 6" O.C.
10- Bottom Truss Cord or Ceiling Joist.
11- Edge Nailing.
12- Exterior Shear Panel or Finish per plan.
13- 2X Studs or Posts.
14- Weep (Stucco) Screed.
15- 2X Bottom Plate.
16- 3-1/2 " Slab Minimum.
17- Waterproof Membrane.
18- 2" Sand Minimum.
19- 1 #4 Top & Bottom Continuous. 15" Overlap at all Splices.
20- 5/8" Dia. x 10" Anchor Bolt w/ 2"x2"x3/16" square washer, typical.
21- Drip Edge.

CITY OF MARYSVILLE
GATEWAY to the GOLD FIELDS

Building Department

Conventional Light Frame Details for Residential Construction

03/01/2002	\FrameDtl.vsd	4 OF 4